Post Top LED Light

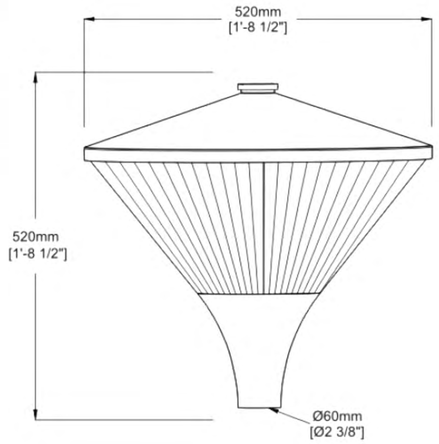

Product Introduction

Light Efficacy: 100~120 lumens/watt
Mounting: diameter 2.4" Pole mounted
CCT: 3000K, 4000K, 5000K, 5700K
Beam Angle: 120 deg.
Finish: Black
CRI: >70
Input Voltage:100-277vac / 250-480vac
Dimming: 1-10vdc available
Occupancy sensor available
Certificate: ETL/cETL listed, CE

Features

- Unique led technology design
- High-duty die-casting aluminum alloy case
- IP 65 rating for Indoor or outdoor wet/damp location
- Shock-proof polycarbonate diffuser
- Suitable for 2.4" Pole Mounted Area Luminaires
- Occupancy sensor photocell available
- 5 years warranty

Specfication

Model#	Input Voltage	Power	Light Efficacy	Beam Angle	CRI	Equv.
LT-PTA30	100-277VAC	30W	120 LPW	120	>70	100W MH
LT-PTA40	100-277VAC	40W	120 LPW	120	>70	150W MH
LT-PTA50 (*)	100-277VAC	50W	120 LPW	120	>70	150W MH
LT-PTA60	100-277VAC	60W	120 LPW	120	>70	200W MH

Order Information

For example: LT-PTA-50-HV-30K-MS

Company	Product Info.	Code	Power	Input Voltage	CCT	Control
LT	PT	A	30=30W	Std.=100-277vac	27K=2700K	DM=1-10DC Dim
			40=40W	HV= 200-480VAC	30K=3000K	DA= Dali Dim
			50=50W	EV=200-240VAC	40K=4000K	PS=Photocell
			60=60W		50K=5000K	MS=Motion Sensor
					57K=5700K	EM=Emergency Kit

Post Top LED Light

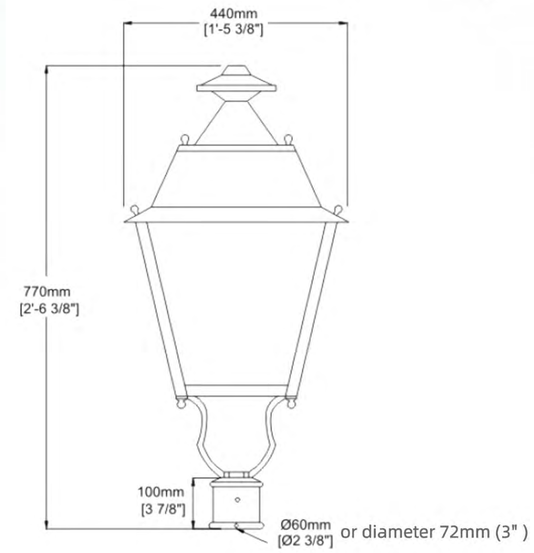

Product Introduction

Light Efficacy: 120 lumens/watt
Mounting: diameter 2.4" or 3" Pole mounted
CCT: 3000K, 4000K, 5000K, 5700K
Beam Angle: 120 deg.
Finish: Black
CRI: >70
Input Voltage:100-277vac / 250-480vac
Dimming: 1-10vdc available
Occupancy sensor available
Certificate: DLC QPL
ETL/cETL listed, CE, RoHs

Features

- Unique led technology design
- High-duty die-casting aluminum alloy case
- IP 65 rating for Indoor or outdoor wet/damp location
- Shock-proof polycarbonate diffuser
- Suitable for 2.4" or 3" for Pole Mounted Area Luminaires options
- Occupancy sensor photocell available
- 5 years warranty

Specfication

Model#	Input Voltage	Power	Light Efficacy	Beam Angle	CRI	Equv.
LT-PTB50	100-277VAC	50W	120 LPW	120	>70	150W MH
LT-PTB50-EV	200-240VAC	50W	120 LPW	120	>70	150W MH
LT-PTB50-HV	250-480VAC	50W	120 LPW	120	>70	150W MH
LT-PTB80	100-277VAC	80W	120 LPW	120	>70	250W MH
LT-PTB80-EV	200-240VAC	80W	120 LPW	120	>70	250W MH
LT-PTB80-HV	250-480VAC	80W	120 LPW	120	>70	250W MH

Order Information

For example: LT-PTB-50-HV-30K-MS

Company	Product Info.	Code	Power	Input Voltage	CCT	Control
LT	PT	B	50=50W	Std.=100-277vac	27K=2700K	DM=1-10DC Dim
			80=80W	HV= 200-480VAC	30K=3000K	DA= Dali Dim
				EV=200-240VAC	40K=4000K	PS=Photocell
					50K=5000K	MS=Motion Sensor
					57K=5700K	EM=Emergency Kit

Post Top LED Light

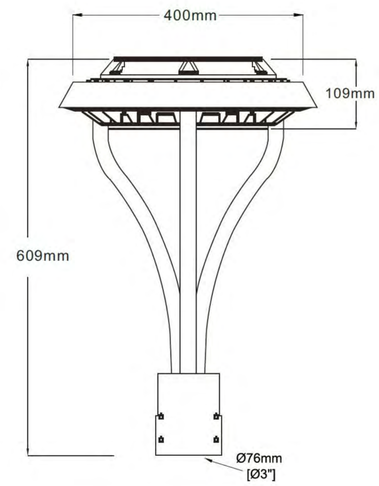

Product Introduction

Light Efficacy: 120 lumens/watt
Mounting: diameter 3" Pole mounted
CCT: 3000K, 4000K, 5000K, 5700K
Beam Angle: 60 /90 deg.for options
Finish: Black
CRI:>70
Input Voltage:100-277vac / 250-480vac
Dimming: 1-10vdc available
Occupancy sensor available
Certificate: ETL/cETL listed, CE, RoHs

Features

- Unique led technology design
- High-duty die-casting aluminum alloy case
- IP 65 rating for Indoor or outdoor wet/damp location
- Shock-proof polycarbonate diffuser
- Suitable for 3" Pole Mounted Area Luminaires
- Occupancy sensor photocell available
- 5 years warranty

Specfication

Model#	Input Voltage	Power	Light Efficacy	Beam Angle	CRI	Equv.
LT-PTR100	100-277VAC	100W	120 LPW	60/90	>70	400W MH
LT-PTR100-EV	200-240VAC	100W	120 LPW	60/90	>70	400W MH
LT-PTR100-HV	250-480VAC	100W	120 LPW	60/90	>70	400W MH
LT-PTR150	100-277VAC	150W	120 LPW	60/90	>70	400-600W MH
LT-PTR150-EV	200-240VAC	150W	120 LPW	60/90	>70	400-600W MH
LT-PTR150-HV	250-480VAC	150W	120 LPW	60/90	>70	400-600W MH

Order Information

For example: LT-PTB-50-HV-30K-MS

Company	Product Info.	Code	Power	Input Voltage	CCT	Control
LT	PT	R	100=100W	Std.=100-277vac	27K=2700K	DM=1-10DC Dim
			150-150W	HV= 200-480VAC	30K=3000K	DA= Dali Dim
				EV=200-240VAC	40K=4000K	PS=Photocell
					50K=5000K	MS=Motion Sensor
					57K=5700K	EM=Emergency Kit

www.lightideled.com
sales@lightideled.com